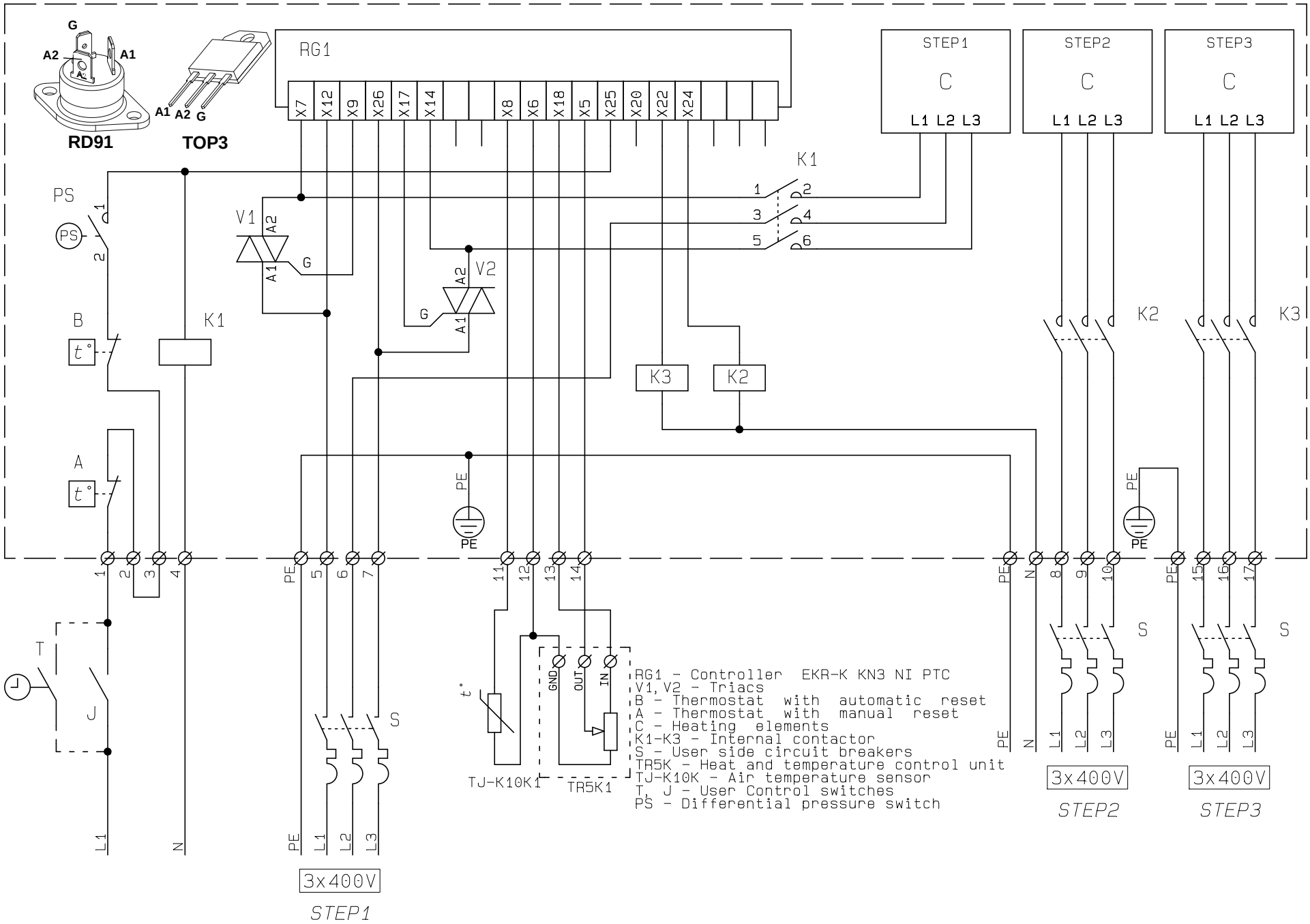
RD91
TOP3
RG1
X7 X12 X9 X26 X17 X14 X8 X6 X18 X5 X25 X20 X22 X24
STEP1
STEP2
STEP3
C
L1 L2 L3
K1
K2
K3
PS
V1
V2
B
A
T
J
S
PE
N
L1
L2
L3
GND
OUT
IN
TJ-K10K1
TR5K1
3x400V
STEP1
STEP2
STEP3
RG1 - Controller EKR-K KN3 NI PTC
V1, V2 - Triacs
B - Thermostat with automatic reset
A - Thermostat with manual reset
C - Heating elements
K1-K3 - Internal contactor
S - User side circuit breakers
TR5K - Heat and temperature control unit
TJ-K10K - Air temperature sensor
T, J - User Control switches
PS - Differential pressure switch